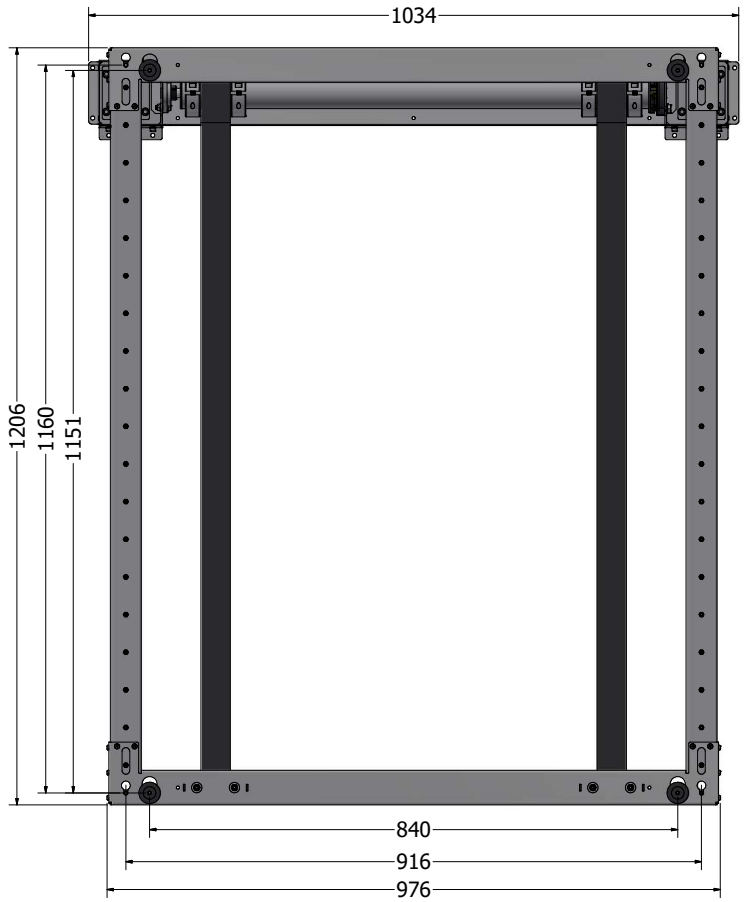

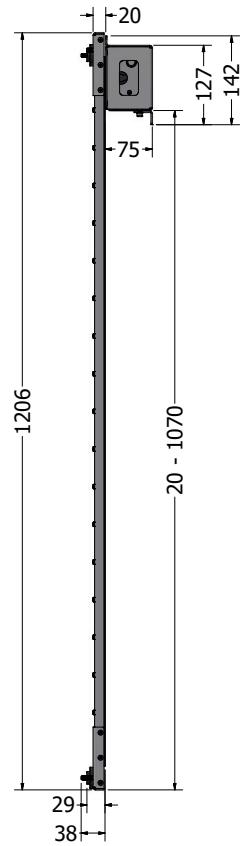

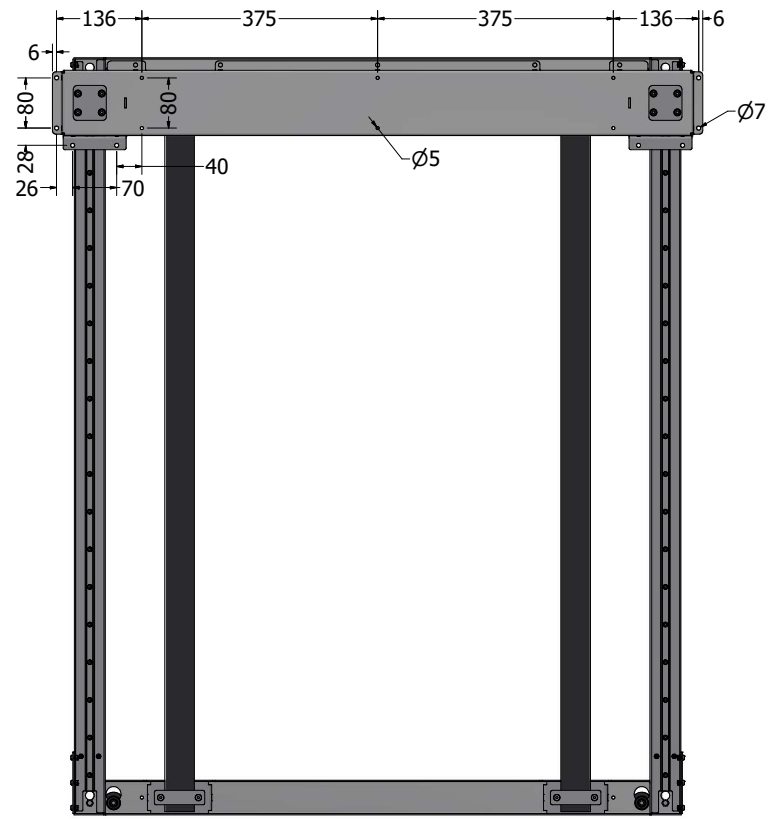

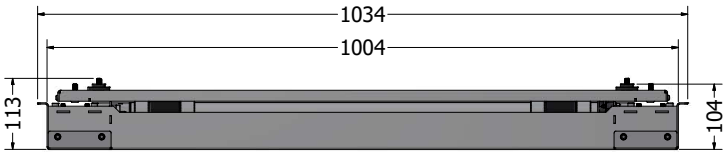

CATEGORY	PANEL WALL LIFT (VERTICAL)	DRAWING TYPE	
MODEL	PA-WLV-V4-1050	DRAFT	FINAL
FEATURE	VERTICAL MOTION UP TO 1050mm, MAX. LOAD 12kg.		X
COLOUR	POWDER COATING RAL9005 (BLACK BUFF)	REVERSION	DATE
DRAWING No	V03-28032025-DI	NO	

unitech systems

ALL RIGHTS STRICTLY RESERVED. REPRODUCTION OR ISSUE TO THIRD PARTIES IN ANY FORM WHATEVER, IS NOT PERMITTED WITHOUT WRITTEN AUTHORITY FROM UNITECH SYSTEMS.